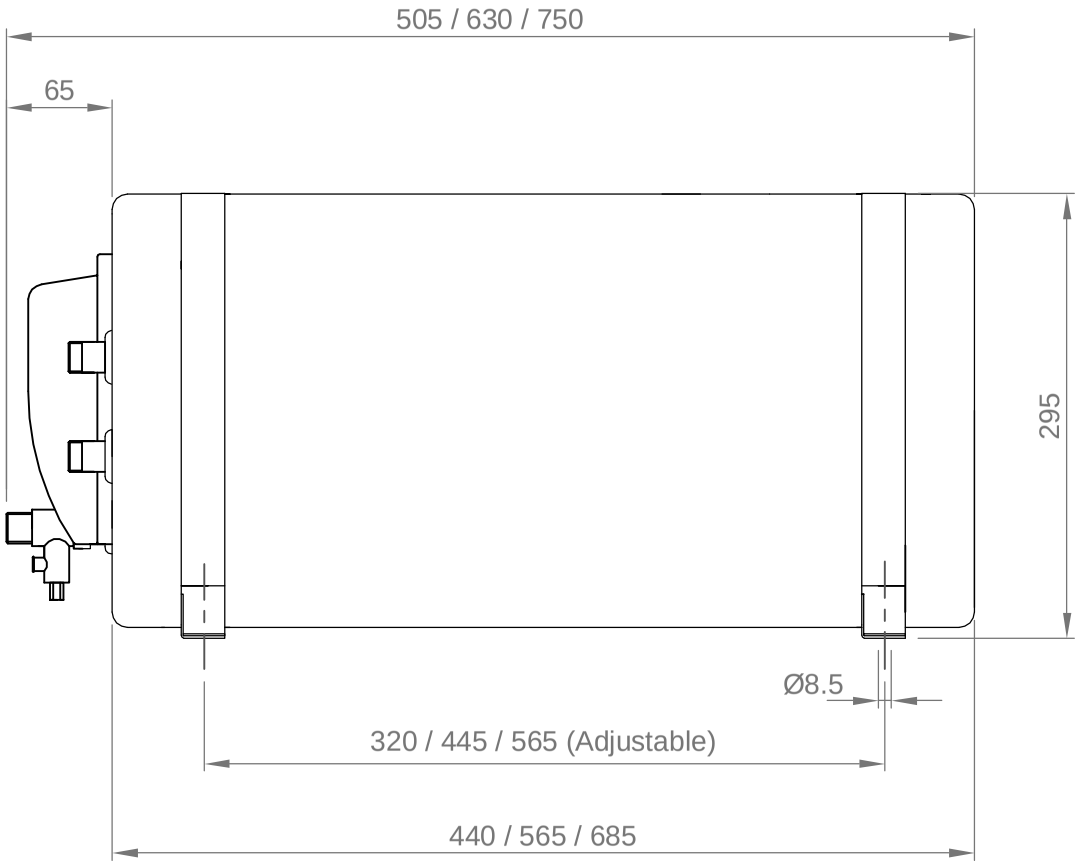

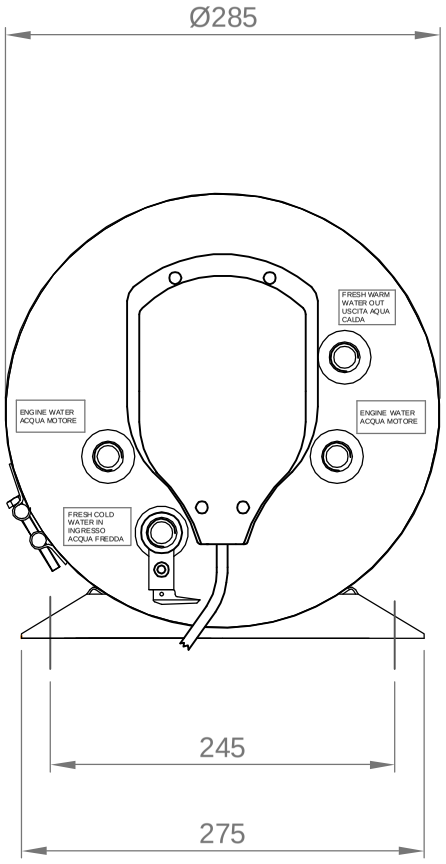

RevNo	Revision note	Date	Signature	Checked

Itemref	Quantity	Title/Name, designation, material, dimension etc			Article No./Reference	
Designed by		Checked by	Approved by – date	Filename	Date 031110/LLG	Scale (0.6)
Owner isotemp by indel marine					Title/Name Isotemp Slim 15, 20 och 25 lit.	
					Drawing number 000745	Edition / Sheet